# iqMAXREFDES42 Documentation

***Release 1.3.0***

**IQ2 Development GmbH**

October 30, 2014

Contents

**Release** 1.3.0

**Date** October 30, 2014

CHAPTER 1

# Introduction

Maxim's Mojave (MAXREFDES42#) reference design features a resistance to digital temperature sensor which can also detect multiple faults. The IO-Link communication protocol enables quick sensor configuration and reduces cabling while featuring a robust, medium speed, communication protocol with power, enabling higher powered sensors than a 4-20mA loop.

## 1.1 Board Specification

| Item | Specification |
|---|---|
| Oscillator Frequency | 18.432MHz |
| Microcontroller | Renesas RL78/G1A (R5F10E8EALA) |
| DC Power | 24V via M12 Connector |
| LEDs | • Power indicator: Green x1<br>• IO-Link indicator: Amber x1<br>• Digital output indicator: Red x1 |
| IO-link Connector | Male M12 4-pole A-coded |
| IO-Link PHY | Maxim MAX14821EWA+ |
| RTD-to-Digital Converter | MAX31865ATP+ |
| SPI 3.3V/5V Level Shifter | MAX1841EUB |
| Dot Addressable Display | SCE5744 Z |

## 1.2 Project Goal

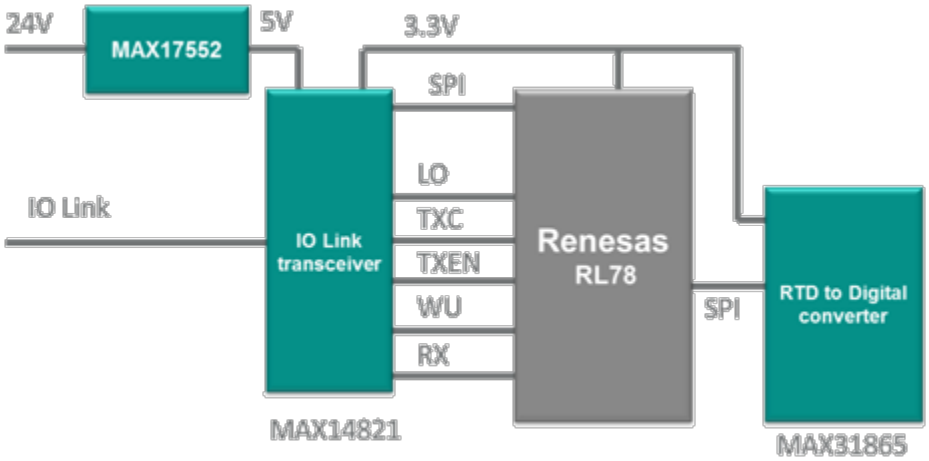


The purpose of this project is by giving the user a strong basis to start develop production-ready IO-Link® application based on Maxim Integrated IO-Link device transceiver (MAX14821), a Renesas ultra-low-power, 16-bit microcontroller (RL78) and iqStack® IO-Link Device Stack.

# Sensor Logic

In iqMAXREFDES42 have been implemented simple switch-point hysteresis logic and additionally can be configured as normally open (NO) or normally closed (NC).

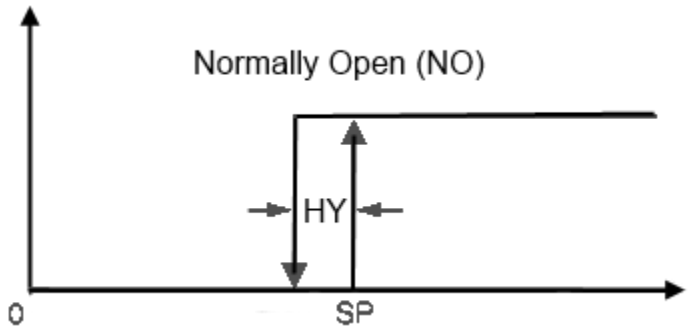


By default ambient temperature switch-point settings (32767 is the maximal value):

| What | SP (Level) | Hysteresis | Mode |
|---|---|---|---|
| Ambient temperature | 9148 (0x23BC, 30°C/86°F) | 32 (0x20, 1°C/1.8°F) | Normally Open (NO) |

**Note:** Ambient temperature switch-point flag always indicated on digital output channel (red LED).

**Note:** Ambient temperature switch-point level can be calculated via IO-Link Tech-in command (160, 0xA0) automatically.

CHAPTER 3

# IO-Link Application

iqMAXREFDES42 communicates with an IO-Link Master on COM3 transmission rate (230,4kbit/s).

## 3.1 Process Data In

```
Bits    23  22  21  20  19  18  17  16  15  14  13  12  11  10   9   8       7   6   5   4   3   2
       +---+---+---+---+---+---+---+---+---+---+---+---+---+---+---+---+   +---+---+---+---+---+---+
  MSB  | x |       ambient temperature process value (15bits)          |   | x | x | x | x | x | x |
       +---+---+---+---+---+---+---+---+---+---+---+---+---+---+---+---+   +---+---+---+---+---+---+

                                                  temperature process value switch-point flag (FALSE/TRUE)
```

## 3.2 Process Data Out

Be absent.

## 3.3 Commands

Can be run by IO-Link Index 0x0002:

| Value | Description |
|---|---|
| 128 (0x80) | Device Reset |
| 160 (0xA0) | Tech-in ambient temperature switch-point level (see IO-Link index 0x0100 below) |

## 3.4 Parameters

| IO-Link index | Mode | Description | Default value |
|---|---|---|---|
| 16 (0x0010) | read-only | Vendor Name | Maxim Integrated |
| 17 (0x0011) | read-only | Vendor Text | The world leader in analog integration |
| 18 (0x0012) | read-only | Product Name | Mojave (MAXREFDES42#) |
| 19 (0x0013) | read-only | Product ID | MAXREFDES42 |
| 20 (0x0014) | read-only | Product Text | IO-Link RTD Temp Sensor |
| 23 (0x0017) | read-only | Firmware Revision | v 1.3.0 |
| 256 (0x0100) | read/write | Ambient temperature switch-point level | 9148 (0x23BC) |
| 257 (0x0101) | read/write | Ambient temperature switch-point hysteresis | 32 (0x20) |
| 258 (0x0102) | read/write | Display's temperature scale (0 - °F, 1 - °C) | 1 (0x01) |
| 259 (0x0103) | read/write | N-wire type connection (2, 3, 4) | 2 |
| 260 (0x0104) | read/write | MAX31865ATP+ Configuration register | 0xCO (2-wire or 4-wire auto conversion mode) |
| 261 (0x0105) | read-only | MAX31865ATP+ RTD (2 bytes) | 0 |
| 262 (0x0106) | read/write | MAX31865ATP+ High Fault Threshold (2 bytes) | 0xFFFF |
| 263 (0x0107) | read/write | MAX31865ATP+ Low Fault Threshold (2 bytes) | 0 |
| 264 (0x0108) | read-only | MAX31865ATP+ Fault Status register | 0x00 |
| 265 (0x0109) | read/write | Reference resistance (3 bytes) | 400_000mΩ (PT100) |
| 266 (0x010A) | read/write | Nominal resistance at 0°C (3 bytes) | 100_000mΩ (PT100) |
| 267 (0x010B) | read-only | Ambient temperature (in °F) | -412.3768°F |
| 268 (0x010C) | read-only | Ambient temperature (in °C) | -246.876°C |
| 269 (0x010D) | read-only | Ambient temperature SP level (in °F) | 86.0°F |
| 270 (0x010E) | read-only | Ambient temperature SP level (in °C) | 30.0°C |
| 271 (0x010F) | read-only | Ambient temperature SP hysteresis (in °F) | 1.8°F |
| 272 (0x0110) | read-only | Ambient temperature SP hysteresis (in °C) | 1.0°C |

## 3.5 Events

| Event code | Description |
|---|---|
| 0x4210 | Device temperature over-run |
| 0x5000 | Device hardware fault |
| 0x5111 | Primary supply voltage under-run |
| 0x6000 | Device software fault |
| 0x7710 | Short circuit |

CHAPTER 4

# Installation Details

There are two ways to experiment with MAXREFDES42#:

- Upload Firmware HEX-file, connect a device to IO-Link Master and play around.
- Clone the source code from Bitbucket repository, go throw and try to debug.

## 4.1 Firmware

Firmware HEX-file, IODDs data and this document in PDF format can be downloaded from the Bitbucket repository absolutely free without registration.

To upload HEX-file into MAXREFDES23 have to get Renesas E1 emulator and also Renesas Flash Programmer.

## 4.2 Source Code

The project source code can be cloned from the Bitbucket repository freely without registration.

Download a trial version of IAR RL78 Embedded Workbench IDE in order to compile it and also take a look for Renesas Application Leading Tool (Applilet).

Also the Renesas E1 emulator and Renesas Flash Programmer needed to start debug session with a device.

CHAPTER 5

# Troubleshooting

If during power-on self-test (POST) hardware fails were occurred, then the main sensor application will not started and instead a first appeared hardware fail number was blinked on digital output red-indicator channel continuously and also was displayed on LCD.

| Blinks Count | Fail Description |
|---|---|
| 1 | Renesas RL78 Illegal memory access (a firmware error, contact with developers) |
| 2 | Renesas RL78 RAM parity check (a firmware error, contact with developers) |
| 3 | Renesas RL78 Illegal instruction (a firmware error, contact with developers) |
| 4 | Maxim MAX14821EWA+ selfcheck (the chip is possibly corrupt, try to restart the device) |
| 5 | Maxim MAX31865ATP+ selfcheck (the chip is possibly corrupt, try to restart the device) |

CHAPTER 6

# Changelog

## 6.1 v1.3 (2014-08-24)

- Improvements:
  - (#12) Temperature readback value in oC does not match display after calibrating Ro
  - (#13) Use '0.xxxx' format for temperature readback values

## 6.2 v1.2 (2014-08-08)

- Improvements:
  - (#9) PT100 & PT1000 & Custom Ro

## 6.3 v1.1.1 (2014-07-28)

- Improvements:
  - (#4) Callendar-Van Dusen equation

## 6.4 v1.1 (2014-06-07)

- **Breaking changes:**
  - (#3) MAX31865ATP+ RTD-to-Digital Converter registers are available as IO-Link parameters
  - (#6) Switch N-wire connection type via an IO-Link parameter
- Improvements:
  - (#5) IODD picture and icon was added

## 6.5 v1.0 (2014-05-17)

- New features:
  - Hardware setups:

    * Renesas RL78/G1A (R5F10E8EALA) microcontroller (with Applilet3 support, see 'src\applilet3_src')
    * MAX14821EWA+ IO-Link Device Transceiver (SPI/UART, see 'src\hw_drivers\c_max1482x.*')
    * MAX31865ATP+ RTD-to-Digital Converter (SPI, see 'src\hw_drivers\c_max31865.*')
    * SCE574x 4-Character 5x7 Dot Matrix Serial Input Dot Addressable Display (SPI, see 'src\hw_drivers\c_sce574x.*')
  - Porting IO-Link iqStack(R) Device and set up the IO-Link communication (see 'src\applilet3_src\r_main.c')
  - Write a simple IO-Link *resistor temperature detector* Application (with appropriate IODDs, see 'src\sensor_appl.c')

CHAPTER 7

# Glossary

**RTD** Short for *resistor temperature detector*.

**PV** Short for *process value*.

**resistor temperature detector** Temperature sensor that operates on the measurement principle that a material's electrical resistance changes with temperature.

**process value** Internal unsigned numeric number, must be converted in order to display a required physical value.

CHAPTER 8

# License

All source files with the correspondent header notes are the subject to the IQ² Development GmbH terms and conditions defined in file `Allgemeine Vertragsbedingungen.pdf`.

For any other details please contact with us.

## P



## R